Proceedings of the Space Nuclear Conference 2005
San Diego, California, June 5-9, 2005
Paper 1201

PRESTO: Power Reactor for Surface Terminal Operation

Louis Qualls, Sherrell R. Greene, Edward D. Blakeman, and Ken W. Childs
Oak Ridge National Laboratory
P.O. Box 2008
Oak Ridge, TN 37831-6074
Tel: 1-865-574-0259, Fax: 1-865-574-0382, Email: quallsal@ornl.gov

Abstract—*The Power Reactor for Surface Terminal Operations (PRESTO) is conceived as a surface power system for providing 12 kW(e) for 7 years on either the moon or Mars. The details of a point design were derived from a coupled set of neutronic, shielding, thermal and structural computer simulations and 3-dimensional design drawings. An integrated design of major system components was developed; these components included the core, vessel, reflector, shielding, Stirling converters (notional), radiators, and structural support. The concept is based on four Stirling converters powered by direct condensation from a natural-circulation boiling-liquid metal reactor. In this conceptual design, the output of the system is limited by Stirling technology, which in the near term, can be reasonably expected to produce 12 kW(e) at a maximum efficiency of 25% to 30%. The criticality requirements of the core dictate that the core would be larger than required for thermal output. In this design, the reactor fuel would experience very low burnup and therefore low swelling and gas production. Doses to structural components and sensitive components in the Stirling alternators and the control rod drive motors are below those expected to lead to degradation during a 7-year mission. The core could nominally produce 50 kW(t) and operate well below the pool boiling critical heat flux limit; therefore, it could be cooled by natural circulation on either the moon or Mars. Forced cooling could be added to the system at higher power levels.*

I. INTRODUCTION

The President's recently announced Vision for Space Exploration lays out an ambitious program of robotic and manned missions to the moon, Mars, and beyond. In our opinion, successful achievement of this goal is predicated on the development of compact nuclear power and propulsion systems for in-space and surface power operations. This paper presents a preliminary point design for one such system—the Power Reactor for Surface Terminal Operations, or PRESTO, concept originally proposed by Oak Ridge National Laboratory (ORNL) in 2003.

The goal of this design effort was to define a functional system architecture that could be readily fabricated, assembled, launched, landed, deployed, and operated for the design lifetime of 7 years. One of the other principal goals of this preliminary design effort was to define the system in sufficient detail to reveal the real issues and challenges associated with the design. The design effort focused on the reactor and the integration of the reflectors, the shields, and the power conversion system. The nonreactor components, and components common to other surface power concepts, are considered in the design, but only in a low-fidelity manner.

The conceptual PRESTO design is shown in Figure 1. A fast-spectrum uranium nitride (UN)–fueled reactor is housed within a reflector and shield. Control drums containing both absorbing and reflective material are rotated within a radial reflector to control reactivity. Fission in the fuel deposits energy in the fuel and surrounding structure. The majority of the energy is transferred to the potassium coolant and results in boiling. Potassium vapor rises from the core, passes through curved penetrations in an upper shield, and is condensed on sections of the reactor pressure vessel in direct thermal contact with the Stirling converter hot ends. The deposited energy passes through the converter, and approximately 25% of it is converted to electricity. The remainder is transferred to the radiators and rejected. Eight of the twelve radiator panels are fixed around the reactor pressure vessel, and four are deployed above the reactor.

Conceptually, PRESTO will provide ~12 kW(e) for 7 years of operation on the surface of Mars or the moon. The system must have the ability to provide makeup

capacity or reject excess capacity in the event of load demand changes, component failures, or sudden changes in the operating environment. An electrical Parasitic Load Radiator (PLR) system is proposed to shunt excess capacity to the environment. The PLR system is sized to replace the capacity lost at the onset of a single converter failure—approximately 2500 W. The PLR is integrated into the reactor system design on the landing platform. The components that control the shunting must be hardened for operation in a radiation environment. The PLRs are positioned in the triangular spaces between the four deployable radiator panels.

In normal nominal operation, the reactor would produce approximately 50 kW(t), and the overall system electrical output will be ~12.5 kW(e), with ~0.5 kW(e) being diverted to the PLR. This would allow the system to produce 10 kW(e) with one failed converter and have capacity to follow transient events. Approximately 37.5 kW(t) will be rejected from the main radiators, and 12 kW(e) will be supplied to the electrical load.

The stainless steel pressure vessel operates at 1000 K during normal operation. The strength of stainless steel falls off rapidly above 1000 K, and the saturation pressure of the working fluid increases rapidly with increasing temperature. Therefore, the operating temperature and pressure of the reactor must be tightly controlled. A passive pressure control system is proposed to prevent reactor pressure vessel over-temperature and over-pressurization. The system would use multiple pressure relief devices extending from the upper dome of the reactor vessel. If the reactor pressure increases above the relief valve setpoint, the valves open and vent vapor directly to condensation sections on the fixed radiator panels. The response of this system should be fast enough to prevent over-temperature events that might occur if one of the Stirling converters were to suddenly fail, disrupting 25% of the heat flow from the system.

An important feature incorporated into this particular core design is passive launch safety. The core is designed to remain subcritical within an acceptable margin for specified accident situation without requiring the use of active safety mechanisms. For this study, the margin for safety has been defined to be a reactivity of $k_{eff} = 0.985$ for an accident that supposes water immersion and sand infiltration within the core. The reactor is also designed to be capable of fulfilling at least a portion of the mission if one of the control drums fails in the shutdown position and the overall temperature coefficients of reactivity are negative.

Because the mission lifetime is 7 years and the power density of the reactor is low, the expected burnup in fuel is also very low (0.2%). The loss of reactivity associated with burnup is small, which allows the maximum clean cold criticality value to be reduced, making it easier to meet the postulated accident requirements.

The critical requirement for the reflector and the shielding is to protect the sensitive components in the Stirling converter and the control drum drive motors located above them. Curved penetrations in an inner shield within the reactor vessel allow potassium vapor to flow from the core to the condensing surfaces. The upper penetration openings expose the converters and control motors to localized concentrations of radiation due to shine which were considered explicitly in the shielding design. For the purpose of this study, the dose limits to the Stirling converter and control drum drive motors were set at 1.6×10^{15} neutrons/cm^2 (1 MeV equivalent) and 1.5×10^8 rad gamma. Also, from the viewpoint of overall mission architecture, it is important to maintain tolerable dose rates for interfacing equipment (such as rovers and other robotic equipment). A 100-m dose limit was established to reflect this mission architecture feature. The 100-m dose limits were assumed to be $<1 \times 10^{13}$ neutrons/cm^2 (1 MeV equivalent), and $<5 \times 10^5$ rad gamma. These dose limits were based on SP-100 guidelines.

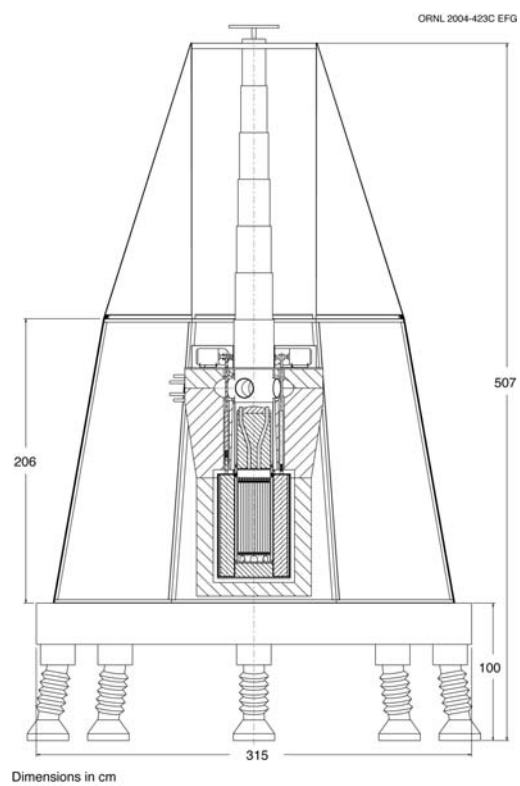

Figure 1. Elevation view of the deployed reactor concept and landing platform.

Figure 2 shows the system with the upper radiators in the stowed configuration. Early lower-power systems could use nondeployable radiator panels in this configuration. However, increased radiator area will be required as power requirements increase. Presently 25 m^2 of radiator area is a projected requirement to produce 12 kW(e). A cross-sectional view of a three-dimensional rendering of the system is shown in Figure 3.

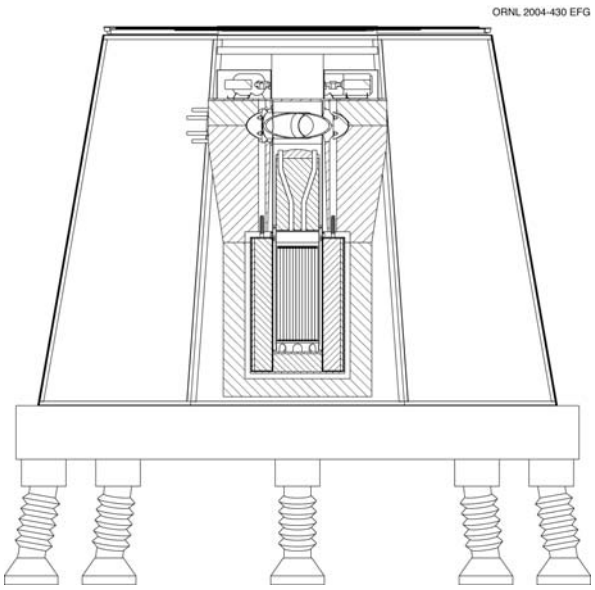

Figure 2. PRESTO system on landing platform (notional) with the radiators in the stowed position.

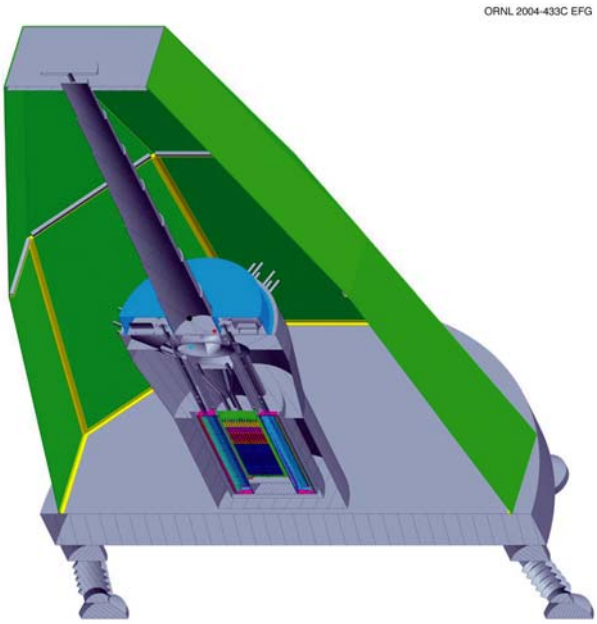

Figure 3. PRESTO system on landing platform (notional) with the radiators in the deployed position.

II. CORE DESIGN

The materials selected in this preliminary design for the reactor structure, coolant, reflectors, and shields are not necessarily the only or the optimal choices. They represent a combination of materials that are believed to be capable of meeting the performance requirements within the proposed system architecture. The material selections are applicable for this particular low-power-density application and will require additional consideration as the system is scaled to higher power levels.

Selection of the core coolant, which is also the working fluid, impacts the vessel's internal operating pressure and therefore strength requirements. The reactor is a boiling system, and the saturation pressure of the coolant determines the operating pressure of the vessel. Liquid metals are obvious candidates for the coolant because they allow high-temperature operation at modest pressure. Of the available materials, sodium and potassium are considered the most obvious choices, and potassium has been chosen for the point design, although a sodium system could be made to work and would operate at lower pressure. Molten salts are also being considered as single-phase coolants.

The efficiency of the Stirling converters increases as the temperature difference from the hot end to the cold end increases. Also, the required system radiator area and mass decreases with increasing cold-end temperature. It is therefore desirable to operate with both the hot- and cold-end temperatures as high as possible.

The required vessel thickness and mass are determined by the strength of the structural material, the nominal operating pressure, the design lifetime, corrosion resistancy, and the allowable design creep. For operation in the Martian environment, any exposed structural material must either be compatible with or protected from the atmosphere and regolith.

The structural materials considered for PRESTO were stainless steels, nickel-based superalloys, and the refractory alloys TZM, Nb-1Zr, and T-111. Nickel-based superalloys are easy to fabricate and would allow temperatures above that possible with stainless steel, but they exhibit high sensitivity to radiation-induced embrittlement at temperatures above 773 K for neutron fluences above ~10^{21} neutrons/cm^2. Refractory alloys cannot be used in direct contact with the Martian atmosphere. Stainless steels are more (although not completely) compatible with the Martian atmosphere and are easy to fabricate.

Although the Medium Power Reactor Experiment (MPRE) program proposed the use of stainless steel at 1100 K, there is uncertainty in operating stainless steel at temperatures approaching 1000 K. Stainless steel, however, is a viable structural material candidate for PRESTO because of the relatively low pressure requirement, short lifetime, and low power density. The maximum-use temperature due to thermal creep for the conventional stainless steel type 347 at a 50-MPa load and a design lifetime of 100,000 h (11.4 years), is given as 963 K. PRESTO has a lower load and shorter lifetime, so the use of stainless steel at 1000 K for the PRESTO appears plausible.

Type 316 stainless steel was chosen as the reactor structural material because of its strength at temperature, resistance to corrosion, and robust nuclear industry experience base. The reactor boundary is assumed to have a minimum wall thickness of 2 mm to accommodate fabrication and welding. Thermal creep, as opposed to radiation damage and irradiation creep, is expected to be the limiting structural consideration for PRESTO. The allowable stress for annealed 316 stainless steel at 1000 K to maintain a total thermal creep of less than 1.5% for 7 years is approximately 21 MPa. [1] The saturation pressure of potassium at 1000 K is approximately 0.08 MPa (11.6 psi). The outer vessel diameter is ~25 cm, and the loop stress on the 2-mm-thick vessel wall is ~5 MPa, well below the allowable limit of 21 MPa.

For PRESTO, the peak neutron fluence at the vessel outer boundary ($E > 0.1$ MeV) is estimated to be approximately 9×10^{20} neutrons/cm^2 during the 7-year mission; therefore, approximately 1 DPA is expected in the stainless steel. The resulting expected irradiation creep rate is negligible.

Limited experimental data exist on the corrosion of stainless steel in the Martian atmosphere at 1000 K [2]. These data indicate that stainless steel is chemically reactive with CO_2 for long-term exposures at temperatures above 923 K, and an expected oxidation rate of 30 μm per year is predicted at exposures of 1 atm of CO_2 at that temperature. The kinetics of the reaction will increase with increasing temperature, but it will decrease due to the reduced operating pressure on Mars. If these effects were to balance, the predicted 30 μm of oxidation per year would be indicative of the expected oxidation rate, and in 7 years the oxidation layer thickness would be 210 μm or 0.2 mm. The remaining wall thickness would still be adequate to prevent thermal creep from exceeding 1.5% during the mission. (This will be an issue of interest for all stainless steel Martian surface power systems.)

Oxidation layers may spall off during cool-down at temperatures approaching 1000 K [1]; therefore, every attempt should be made to reduce thermal cycling of the system. The effect of the free O_2 in the Martian atmosphere on this spallation process is not known and will require more detailed examination to support design of any high-temperature stainless steel system for Martian applications.

UO_2, the baseline MPRE fuel, was shown to work neutronically and thermally in the PRESTO concept. Because the power density of this core is very low, any fuel that meets the temperature requirement should work within this concept. Additional analysis, however, indicates that uranium nitride (UN) and uranium carbide (UC) fuels permit substantially smaller cores. Cermet fuels are also viable candidates. Uranium nitride fuel has been selected for this study because it allows a smaller core, has better thermal conductivity than UO_2, and has a more robust experience base than UC.

PRESTO employs the "spectral-shift" approach to maintenance of adequate subcriticality margins during water-immersion scenarios associated with launch accidents. Rhenium is placed within the core to absorb thermal neutrons. In order to be most effective as a thermal neutron absorber, rhenium must be placed in close proximity to the fuel; therefore, rhenium is included within the fuel pin as a liner. Liners place the rhenium in the closest possible proximity to the fuel in a manner that will not allow it to be separated from the fuel during a launch accident. A rhenium liner can reduce nitrogen loss from the fuel and can also serve structural functions. Rhenium is chemically compatible with potassium and can therefore be placed in direct contact with the potassium at 1000 K. Interstitial rhenium can also be added to the core as structure among or around the fuel pins.

A rhenium liner protects the fuel from the coolant in the event of an outer cladding failure, and it also prevents the outer cladding from being exposed to internal pressure caused by fission gas release, allowing the outer cladding to operate at higher temperatures. Stainless steel is compatible with rhenium at temperatures in excess of 1100 K, so a thin-walled outer cladding could be allowed to creep down onto a rhenium liner for structural support.

The reactor core has reflectors and shields located both inside and outside the reactor pressure vessel. The reflector material is BeO, which was chosen over beryllium because of the potential for significant swelling of metallic beryllium at the temperatures of interest [3,4]. The internal reflector material is contained as BeO pellets above the fuel pellets within the fuel pins and also as BeO

surrounded by stainless steel cladding in the inner upper shield located above the core.

BeO is also used as a shielding material within the reactor vessel, where temperatures are 1000 K and higher. The inner upper shield protects the Stirling converters and the control drum drive motors from neutron and gamma radiation. It is in contact with the working fluid and is heated internally by energy deposition from the reactor core. Portions of the inner shield will therefore operate at temperatures above the reactor coolant temperature and will be cooled by the coolant vapor.

Lithium hydride is used as a shielding material outside of the vessel. Normally, the operating temperature range of LiH is 600 to 700 K, but the upper limit can be extended to 800 K by operating the LiH in a pressurized environment [5]. The restrictive temperature range of LiH requires that the physical location of the materials remove be carefully considered to accommodate energy deposition caused by nuclear interactions and conduction from the reactor vessel.

The details of the converter design are not the focus of this design effort, and the Stirling converters are treated somewhat notionally. The Stirling converter could be a design that incorporates four units within a single housing, or it could be four separate units that operate independently. In either case, the hot-end surfaces of the units are oriented in a cross pattern above the core, extending towards the center of the reactor vessel.

The hot-end surfaces could operate in direct contact with the working fluid and form a portion of the reactor pressure boundary, or the converters could be separate from, but in close thermal contact with, the reactor boundary. Separating the converters from the reactor boundary allows more flexibility in their design, including the possibility that they can be made of different material than the reactor primary system boundary. The internal operating pressures of the Stirling converters are substantially higher than the reactor vessel pressures, and lower temperatures and stronger materials may in fact be required. For this design effort, it is assumed that the converter units are separate from the pressure vessel; with this being the case, a temperature drop from the reactor vessel to the Stirling hot end will exist and must be considered.

During normal operation, working fluid condenses on the reactor boundary in thermal contact with the hot-end surfaces and deposits its energy of vaporization. The energy transferred to the converter hot-end surfaces is processed through the unit by the constant shuttling of the working gas between the hot and cold ends. The constant cooling and heating of the working gas moves a power piston back and forth in harmonic oscillation at frequencies on the order of 100 Hz. The power piston is attached to a rod that oscillates within a liner alternator and produces an alternating electric current. The energy not converted to electricity is transferred from the cold end to the radiators and rejected to the environment.

The linear alternators within the converters are the most temperature- and radiation-sensitive components within the reactor system, and they, along with the control drum drive motors, limit the allowable dose to the region above the core.

It is assumed that the Stirling converter can be made to operate at efficiencies of 25% at a hot-end temperature of 975 K and a cold-end temperature of 525 K. The mass and the overall dimensions of the Stirling converters are those reported for the Stirling Technology Company's RG-3000 3-kW(e) Stirling converter [6].

Mechanisms for reactivity feedback include the fuel temperature (Doppler feedback), the reflector temperature, the change in potassium liquid level, and the thermal expansion of the fuel, core, and reflector. The Doppler feedback coefficient for highly enriched reactors is typically very small, and for PRESTO is –0.01 cents/K. The temperature feedback for the BeO reflector is +0.03 cents/K. However, in operation this is a delayed reactivity effect, and because the increase in the reflector temperature will be much smaller than changes in the fuel temperature, it will likely be a smaller overall reactivity effect than the Doppler reactivity.

The thermal expansion of the fuel, core, and reflectors are also feedback mechanisms because of leakage from the core. The overall reactivity effect combining all temperature feedbacks (Doppler, reflector temperature, and expansion) results in an overall isothermal reactivity temperature coefficient of –0.18 cents/K.

The reactivity effect resulting from a change in the liquid potassium level was also evaluated. Calculations were performed at liquid levels of 0, 10, and 29 cm, resulting in an average reactivity coefficient of +0.79 cents/cm. Hence, increased voiding of the potassium coolant will result in a negative feedback effect, as confirmed by the positive overall reactivity worth of the potassium.

The overall volumetric peaking factor is 1.36. The peak pin has a peaking factor of 1.17, and the axial power distribution is essentially uniform over the entire reactor, with a peak-to-average value of 1.15. The peak pin occurs

in the center of the reactor, and the axial peak occurs slightly above the axial midpoint of the fuel.

Cylindrical fuel and reflector pellets are stacked within the rhenium liners, and the liners are sealed with a low-pressure charge of helium. The helium pressure is set high enough to preclude a significant reduction in thermal conduction from the fuel to the liner, but low enough so that the internal pressure of the linear remains at or below the operating pressure of the coolant. The outer cladding is also filled and sealed with low-pressure helium after the liner is inserted. The outer cladding does not need to be bonded to the rhenium liner because the power density of the core is small and temperature differences across the gap are small.

An expansion volume is included above the reflector pellets to compensate for axial thermal expansion of the fuel and to provide an expansion volume for any fission gas released from the fuel. Springs apply slight pressure to the pellets and the liner to keep them in position. The ends of the outer cladding seal caps have protrusions for positioning within the assembled core.

The final core arrangement is shown in Figure 4. The upper and lower fuel-positioning plates are confined within a cylindrical outer shell, which is supported by a lower plenum support structure to form the core structure. The holes in the positioning plates determine the pitch of the fuel lattice. Openings between the positioning holes allow coolant to enter the flow channels and flow upward during normal operation. The openings are adjusted to establish desirable flow rates within the core. The interstitial rhenium rods placed among the fuel pins are also supported by the positioning plates. Although not incorporated in this preliminary point design, the core may be channelized by grouping fuel pins within a shroud. The shrouds will enhance the natural circulation driving force and prevent cross flow within the core, which could be important for higher power applications.

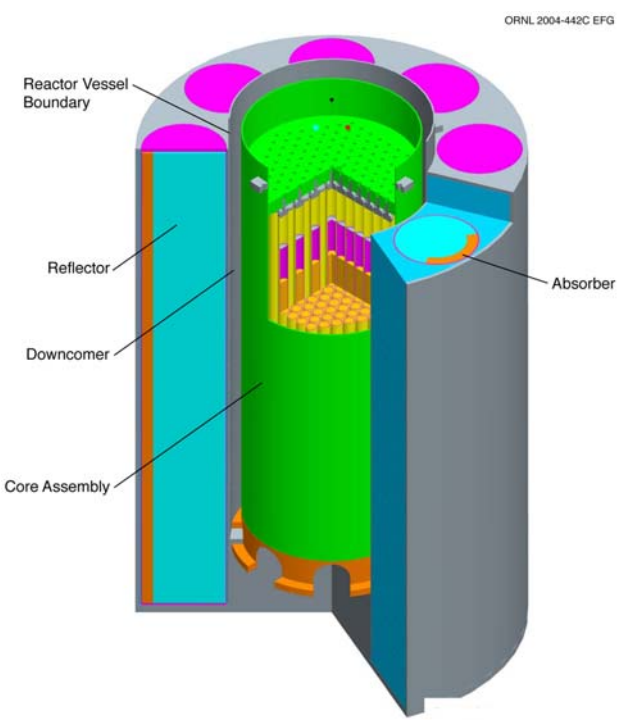

Figure 4. PRESTO reactor core reflector and control drums.

III. THERMAL HYDRAULICS

When the assembled core is inserted into the lower reactor vessel, the core's outer shell defines the annular downcomer region within the reactor vessel, and scalloped openings in the base of the lower plenum support structure allow coolant to flow from the downcomer to the lower plenum. The low power densities associated with normal operation of this core result in heat fluxes well below the critical heat flux for pool boiling in potassium in reduced gravity. The expected flow rates are small and the reactor will operate much like a pool boiler.

A one-dimensional estimate of the flow rate through the system has been made. Several simplifying assumptions were made to facilitate the computation. The most critical of these assumptions is the two-phase friction factor for potassium. Based on experience from the MPRE program, it appears that the potassium friction factors are reasonably approximated by those for water. Thus, friction factors for water were used. This leads to some uncertainty in the predicted flow rates. However, the impact on the estimated temperature distribution is small because the heat transfer is dominated by the boiling heat transfer coefficient and the system is essential isothermal. Approximately 1 kg/s circulates through the core, and ~0.025 kg/s is vaporized during normal operation.

The maximum expected temperature difference from the coolant to the centerline of the fuel is predicted to be approximately 25 K. The temperature restrictions imposed by the use of stainless steel structural materials and the low power density ensure that the centerline temperature of the fuel will not exceed safe levels. The temperature distribution within the fuel is expected to change very little during the mission due to thermo-physical changes in the fuel pin materials associated with burnup and fission gas release.

The radial reflector surrounds the core and is made from solid BeO blocks that are stacked and canned. The blocks are shaped with an axial step, and they connect radially at the reflector control drum location to remove any direct line of sight through the reflector due to the assembly of distinct blocks. Cap blocks are used at the top and bottom of the reflector to complete the cylinder. The radial reflector is sealed by a stainless steel cap. Eight protrusions from the cap are inserted into the holes formed by the reflector blocks, and the upper cap is welded to the inner and outer cylinders to seal the reflector. Control drums fit in the protrusions.

IV. REACTIVITY CONTROL

The eight control drums are equally spaced around the radial reflector to control reactivity. The control drums are cylinders that rotate within holes in the radial reflector. The drum is a stainless steel canister filled mostly with BeO. B_4C, a neutron absorber material, is contained within a thin layer on one-half of the outer surface of the BeO. Rotating the absorbing material toward the reactor core decreases the reactivity of the system. The thickness of the reflector determines how far the adsorber can be displaced from the core and is an important parameter in meeting reactivity requirements. The top of the drum has a keyed protrusion. Extension, or "reach," rods penetrate the upper shield and are installed over the protrusions to rotate the drums. Each control drum has a total mass of ~25 kg.

The drums are positioned radially between the four Stirling converters to allow the reach rods to extend past them. The splined shaft arrangement allows the extension rod to be installed onto the control drum without requiring access to the top of the reflector after the upper shield has been mounted onto the lower shield.

Motors positioned on a mounting plate above the converters are connected by a worm gear to the extension rods. The motors are mounted with their shafts perpendicular to the angle of control drum rotation, which allows them to be displaced radially to lower dose locations.

V. SHIELDING

A stainless-steel-clad LiH shield surrounds the reflector and the reactor vessel up to and surrounding the Stirling converters. The shield is made in three sections (lower, middle, and upper). The lower section surrounds the reactor vessel and the reflector. The middle section surrounds the upper reactor vessel up to the Stirling converters, and the upper section covers the converters. Neutron fluence and gamma dose analyses were performed using Monte Carlo models. Placing the converters at the ~40–50 cm location appears to meet fluence and dose guideline limits. The drive motors extend inboard of the ~40–50 cm Stirling section but are physically located above the Stirling converters and are shielded by the LiH surrounding the converters. The overall dose to the motors is also well within guideline limits.

The height of the upper inner shield was adjusted to maintain dose limits to the converters and the drive motors. The required distance was determined by this analysis to be ~58 cm from the bottom of the internal BeO shield to the centerline of the Stirling converters.

The current shielding configuration includes a nominal 10-cm-thick radial section to provide shielding to remote locations. The guidelines were assumed to be 1-MeV neutron damage fluence and gamma doses of 1×10^{13} neutrons/cm^2 and 5×10^8 rad (Si) at a distance of 100 m. These guidelines, however, are in the absence of any current strategies for equipment placement and/or localized shielding and are subject to later revision. Monte Carlo calculations show that the neutron fluence is approximately equal to the guideline limit and that the gamma dose is approximately an order of magnitude below the guideline limit with the present shielding arrangement.

In order to evaluate the efficacy of the lower shield, analyses were performed with the bottom shield removed and replaced with a void. Results showed that the neutron 1-MeV equivalent fluence and the gamma dose increased significantly, primarily at the 50-cm location along the axial midplane of the Stirling systems. At this location, the fluence approximately doubled, and the gamma dose increased by ~15%. Evidently, the shield at this location presents a minimal thickness to particles scattered from the surface. Thus, a nominal amount of shielding at the bottom of the reactor is effective and needed for shielding to the Stirling components. The 5-cm thickness used in the calculations results in a significant effect and represents a conservative analysis because ultimately a 10-cm-thick shield was incorporated into the point mechanical design. Removal of the bottom shield, however, had no discernable effect on the neutron fluence or dose at the 100-m distance.

VI. HEAT REJECTION

The waste heat from the Stirling converters is transferred from the cold ends of the converters to the radiators using heat exchangers and heat pipes. Heat pipe evaporator sections are inserted into the heat exchanger, which could be solid aluminum pieces or stainless steel shells filled with liquid metals. The waste heat from the

Stirling cold ends evaporates heat pipe working fluid and is deposited into the radiator as the working fluid condenses on the heat pipe surfaces in contact with the radiators. Water, toluene, and mercury are potential heat pipe working fluids for this application.

The PRESTO radiator design is a combination of fixed radiator panels that operate mostly below the Stirling units and deployable radiator panels that operate above the Stirling converters. Loop heat pipes are used because they are gravity insensitive. They will start whether the evaporator section is above or below the condensing section in a gravitational field. They can also be fabricated with flexible, and therefore deployable, sections.

An octagonal, single-sided radiator concept has been chosen for PRESTO. Approximately 5 to 6 m^2 of surface area is required for each Stirling unit. Radiator surface area is created by welding aluminum fins extending at 180º from the condensing sections of the loop heat pipe condensing sections. Eight fixed panels are arranged on a support structure surrounding the reactor. The support structure, reactor, and radiators are supported by the landing platform. Four deployable radiator panels are folded on top of one another on top of the support structure in the stowed configuration. These panels will be raised and locked in an upright position after landing. The fixed radiator panels are inclined 10º and have a view factor to space of 0.59. The deployable panels have a view factor to space of 0.64. The maximum dimension across the base of the fixed panels is 2.7 m, and the stowed height of the radiator assembly is 2.1 m. When deployed, the four upper panels extend to an overall height of 4.1 m above the landing platform.

Six heat pipes transfer approximately 9500 W from each of the four Stirling converter cold-end heat exchangers. In nominal operation, each heat pipe carries approximately 1.6 kW(t); however, each heat pipe should be capable of carrying 2.4 kW(t) in order to allow for two heat pipe failures per unit.

The heat pipes will deposit the heat onto the radiator surface in localized areas at the Stirling cold-end temperature. The radiators are designed to operate at an average temperature of ~450 K when rejecting 37.5 kW(t) of heat to an ambient temperature of 270 K.

An analysis indicates that aluminum panels with a thickness of 3 mm are required to achieve an average temperature of ~450 K under the assumed operating conditions. The resulting radiator mass is an estimated 202 kg (not including the heat pipes). Anodized aluminum has a reported emissivity of 0.85. A value of 0.7 was assumed for this analysis.

It is assumed that the upper section of the radiator will be sealed at deployment to prevent or reduce dust from settling inside. A telescopic antenna could be mounted on top of the reactor support structure that, when deployed, supports the radiators and seals the upper (square) opening formed by the radiators, as can be seen in Figure 3. Deployment of the four upper radiator panels will leave four triangular openings with a total area of 3.6 m^2. The parasitic load radiators (PLRs) are housed in these areas.

The mass of the PRESTO system is summarized in Table 1. The total mass of the system (excluding the landing platform and rover) is approximately 2000 kg. The resulting mass-to-power ratio (alpha) is 160 kg/kW(e).

Table 1. Mass summary

Item	Mass (kg)
Converters and motors	308
Control drums	202
Rhenium	68
Fuel (UN)	94
Shield (LiH)	519
Reflector (BeO)	217
Radiators (Aluminum)	202
Structure (SST)	291
Miscellaneous	95
TOTAL	1996

VII. DYNAMIC SYSTEM RESPONSE

The incident solar energy flux on the Martian surface is approximately 560 W/m^2. Sunlight will increase ground temperature (and therefore heat rejection temperatures) and directly impart energy to the radiators on a 24.7-h cycle. The radiator view factors, the clarity of the atmosphere, the ground temperatures and the incident solar flux on the radiators all play a role in determining the anticipated temperature swing of the radiators, which determines converter temperature and therefore efficiency.

The efficiency of the converters is anticipated to vary as a fixed fraction of the Carnot efficiency for modest deviations from design temperature. As the radiator temperature decreases, the efficiency of the system increases and less waste heat must be rejected to produce the desired electrical output. More waste heat must be rejected as the average radiator temperature increases.

The characteristic response time of the system is a function of system mass, thermal conductance between components, and the response of the reactor to changes in operating temperature. The three perturbations of most interest are (1) Stirling converter failure, (2) a sudden change in the operating environment, and (3) a sudden change in load demand.

The sudden failure of a single converter unit is assumed to be the most severe failure that must be accommodated by the control system. If a single unit were to suddenly fail, one-fourth of the energy being produced would not be removed from the system. The remaining units would eventually process the excess energy and compensate for the required electrical demand, but this response would be transient as the hot- and cold-end temperatures change to new equilibrium temperatures. Reactor temperature would increase during the transient due to the reduction in condensing surface area and increasing hot-end temperatures. The negative temperature feedback coefficients would decrease reactor power, and this reduction would eventually require compensation by the reactivity control system. The reduction in reactor power will still leave the other units operating at capacities higher than typical, and care would have to taken to ensure that the surviving units would not be overdriven.

The response time to an environmental change is dependent upon the mass and material of the radiator. A preliminary simplified dynamic system response model was developed to estimate the response of the system to anticipated environmental changes. The model includes a simplified representation of the reactor core and its response to temperature changes. The temperature of the reactor is assumed to vary directly with converter cold-end temperature, which itself is assumed to vary with the average radiator temperature. The Stirling system response to the changes in cold- and hot-end temperature is modeled as a change in efficiency that is instantaneous and proportional to the change in Carnot efficiency.

Figure 5 shows the open-loop system response to daily changes in the operating environment. (The PLR system is not modeled.) The available heat sink temperature is modeled as a sinusoidal variation of 50 K around an average temperature of 125 K. The incident solar radiation is modeled as a square wave with one-half Martian day duration. A dust storm is modeled as a sudden increase in the available heat rejection temperature 14,500 s into the simulation. The open-loop response to normal daily swings in the operating environment is a variation in the electrical output of approximately 750 W as the radiator temperatures increase from 441 to 459 K. The change in operating conditions occurs over a period of approximately 2000 s. The change is similar for the dust storm, but it occurs more suddenly.

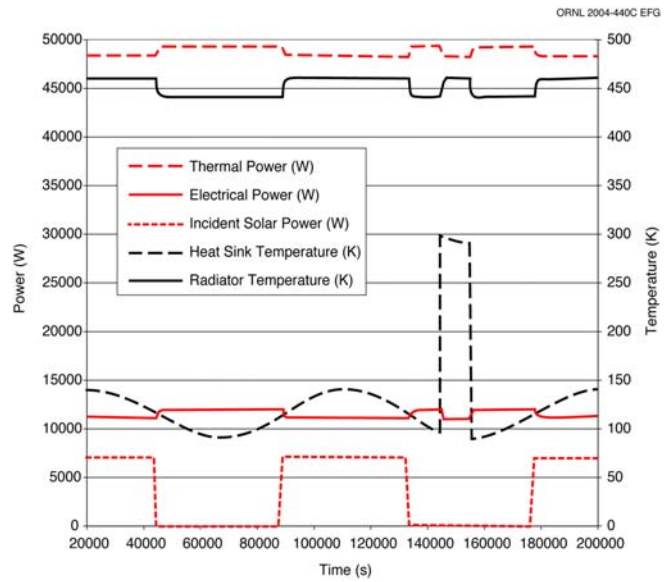

Figure 5. Open-loop response of the PRESTO system to typical environmental changes that are expected on Mars.

VIII. CONCLUSIONS

This paper presents a preliminary point design for the ~12 kW(e) Power Reactor for Surface Terminal Operations (PRESTO). The concept is based upon an extensive testing program conducted at ORNL during the 1960s, in which over 100,000 h of loop and component tests of boiling potassium systems were conducted. The design is simple and compact power system for lunar and Mars surface applications. The system is also highly testable. The reactor core technologies and architectures should be scalable to much higher power levels than those utilized in this initial design. Additional analyses should be conducted to further refine the concept and to explore alternative design options.

ACKNOWLEDGMENTS

This work was performed in part by Oak Ridge National Laboratory (ORNL) for the U.S. Department of Energy (DOE) in support of the National Aeronautics and Space Administration (NASA). ORNL is managed for DOE by UT-Battelle, LLC, under contract DE-AC-05-00OR22725. Any opinions expressed in this paper are

those of the authors and do not necessarily reflect the views of DOE or NASA.

REFERENCES

1. Nuclear Systems Materials Handbook, Vol. 1, Design Data, Part 1, Structural Materials, Group 1, High Alloy Stainless Steels, Section 4 31655, Annealed.

2. H. E. MCCOY, Type 304 stainless steel vs. flowing CO_2 at atmospheric pressure and 1100–1800°F, *Corrosion* 21 (1965) 84.

3. V. R. BARABASH, G. FEDERICI, M. RODIG, L. L. SNEAD, and C. H. WU, Neutron irradiation effects on plasma facing materials, *J. Nucl. Mater*. 283–287 (2000) 138–146.

4. D. S. GELLES, G. A. SERNYAEV, M. DALLE DONNE, and H. KAWAMURA, Radiation effects in beryllium used for plasma protection, *J. Nucl. Mater*. 212–215 (1994) 29–38.

5. R. K. DISNEY, Status report on the SP-100 program investigations of irradiation-induced swelling of lithium hydride shield materials, Westinghouse Electric Corp., Nuclear and Advance Technology Division Report SP-GES-W-92-3552, 1992.

6. R. J. LIPINSKI and D. POSTON, Concept Package for a Small Mars Surface Fission Power System, R. J. Lipinski et al., Sandia National Laboratories, Albuquerque, NM 87185, and D. Poston et al., Los Alamos National Laboratory, Los Alamos, NM 87545.